CHESHIRE mouldings TRADE

Louvre Light Commercial Fitting Instructions

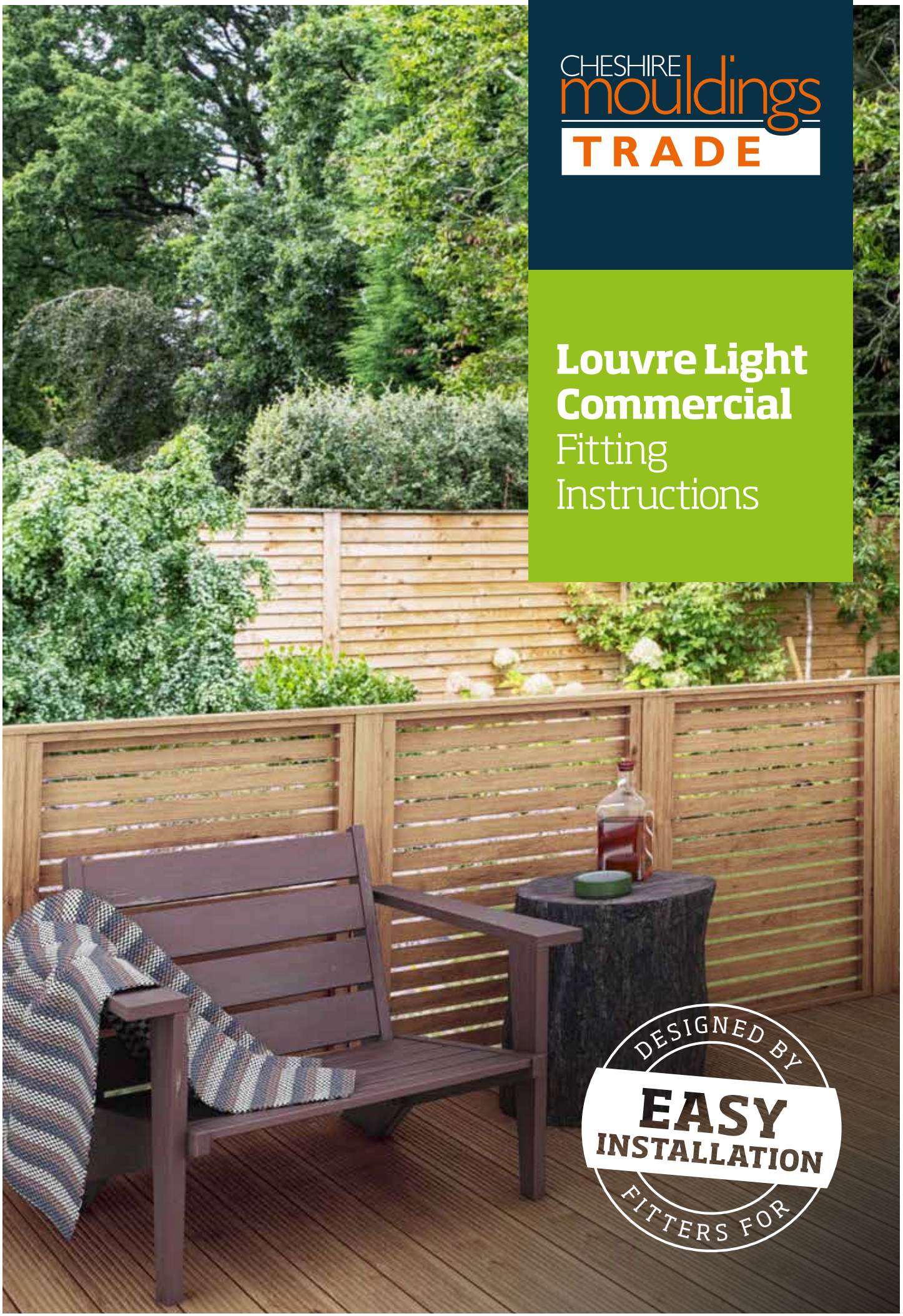

DESIGNED BY EASY INSTALLATION FITTERS FOR

Important Information

The following instructions are for installing the Cheshire Mouldings **Softwood Louvre Light Commercial** decking system.

Cheshire Mouldings **Softwood Louvre Light Commerical** system is **suitable for both ground level decks** and **raised decks over 600mm** above ground level.

Maximum distance between **posts** is **859mm.**

Cheshire Mouldings Core Deck softwood system has been independently tested by FIRA and when installed in accordance with these instructions, conforms with Building Regulations for balustrades at 1100mm high and 0.74KN/m light commercial loadings.

As only official Cheshire Mouldings parts have been tested, the use of non Cheshire Mouldings products used in conjunction with this system cannot be guaranteed to conform.

If you have any queries please contact our technical helpline on **(0800) 085 3475.**

Please note:

All components should be inspected BEFORE installation commences for any damage, as Cheshire Mouldings cannot be held responsible for any damage caused during installation.

Tools required:

Saw, Battery drill, pozi-drive bit, 2mm dia drill bit, hammer, chisel, spirit level, tape measure, square, 100mm landscape screws post fixings.

Fitting Instructions

Installing Posts

To establish correct height for posts, measure down 1150mm from top of post and mark. This indicates location for top of deck board level **(Fig 1).**

Secure your posts at the correct height with 100mm landscape screws by either positioning the posts inside the joists so that 2 post faces can be secured through 2 joists at 90° **(Fig.2)**. If this is not possible, posts that are fitted to the outside of the joists should be half lapped to the height of the joist and deck board thickness and rebate any corner posts if the balustrade has a 90° turn **(Fig.3).**

Post should be positioned no greater than 859mm between posts **(Fig 4).**

Installing rails

To cut L rails to correct length, measure distance between posts. Mark and cut top and bottom L rails. Offer bottom L rails between posts so that 41mm rebate flat is set parallel to deck boards and is located facing onto the decking **(Fig 5).**

Check that the width of the rail is central to post faces. Drill 5 off clearance holes through 41mm face along the length of the rail and countersink the holes **(Fig 6).** Secure bottom rail to decking using 4.2mm x 63mm screws, not supplied **(Fig 7).**

Fig.1

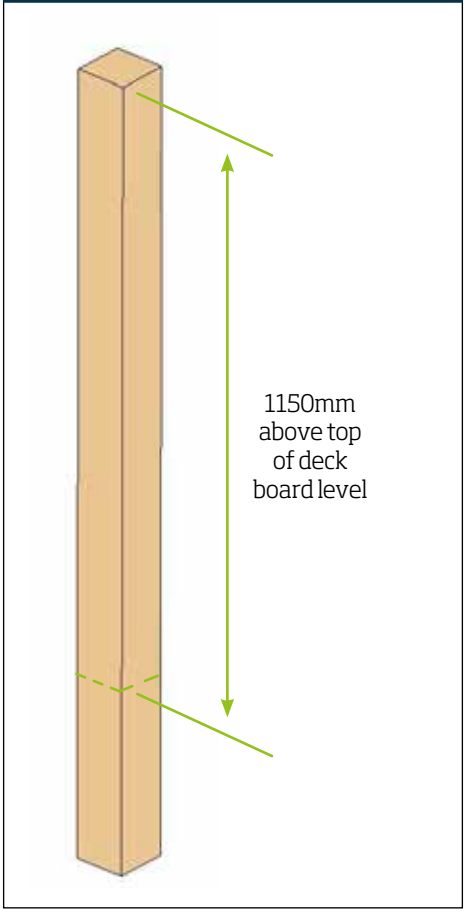

Fig.2

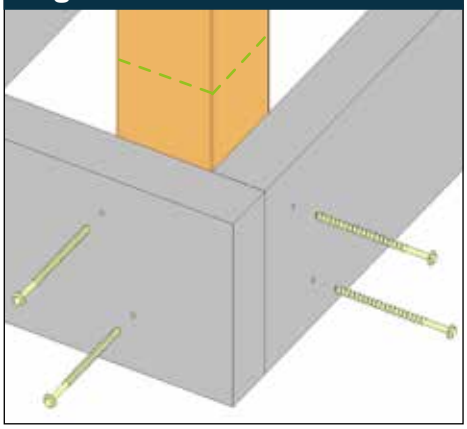

Fig.3

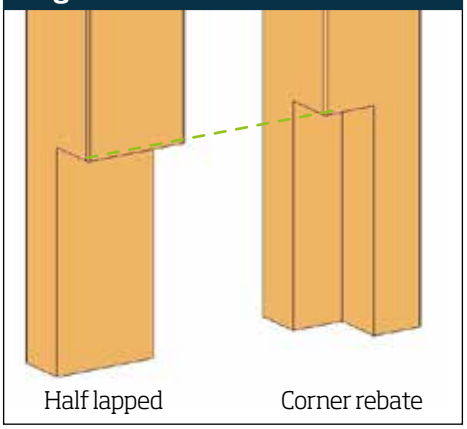

Fig.4

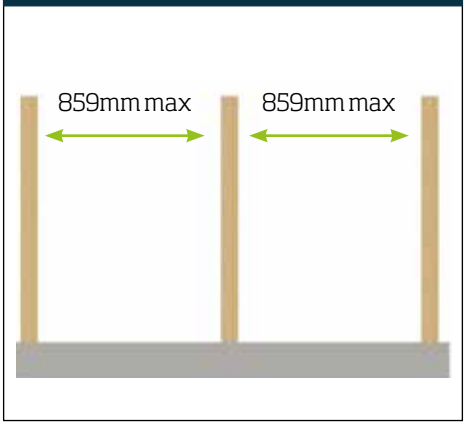

Fig.5

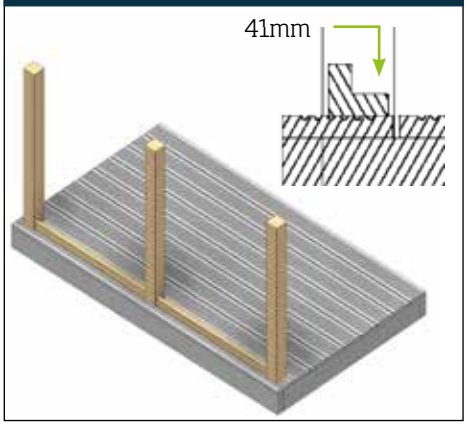

Fig.6

Fig.7

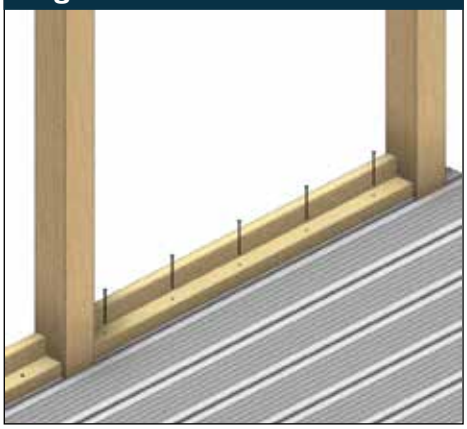

For the top L rail, offer the rail between posts so they mirror the bottom rail i.e so that the 41mm rebates are facing each other Check that the top rail width is central to post faces **(Fig 8).**

Position the fixing plate central to end post and rail top and that the angled end is positioned on top of the post and flush with diagonal centreline of post top **(Fig 9).** Pilot drill through fixing plate screw holes using ø2mm bit and secure to post and rail top using screws supplied. For the central post, fit fixing plate the same as the end post. To fit next L rail, turn fixing plate over so it is aligned and butts up to previous fixing plate and fix **(Fig 10).** Repeat this sequence for all spans in the run.

Measure and cut capping rail to length **(Fig 11).**

Check the capping rail is positioned central to post tops and sits flush on top of posts over the fixing plates **(Fig 12).**

Drill 4 x clearance holes down through capping rail and countersink. Fix capping rail to post tops using 4.2mm x 75mm screws (not supplied) **(Fig 13).**

Repeat at each post top.

For balustrade runs longer than 1800m the capping rail should be joined central to post tops and reverse mitred. Secure using 4 x screws as above **(Fig 14).**

For 90 degree balustrade turns, align fixing plates so they are central to post and rail and fix. Mitre the capping rail and secure to post tops as previous **(Fig 15).**

Fig.8

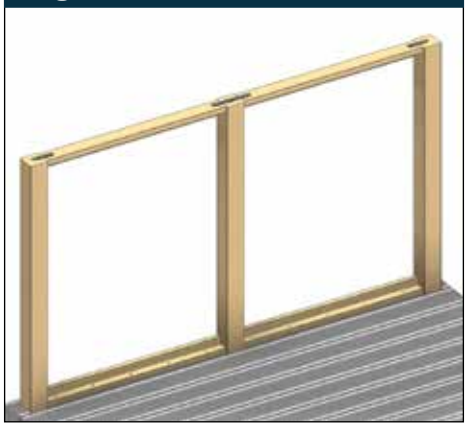

Fig.9

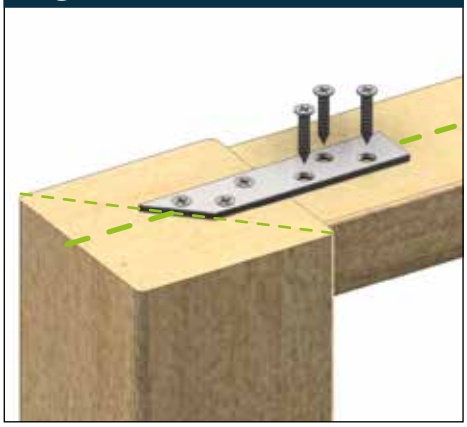

Fig.10

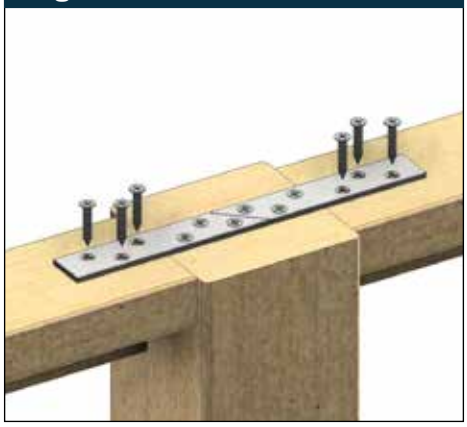

Fig.11

Fig.12

Fig.13

Fig.14

Fig.15

On the underside rebate of top L rail, drill 5 x countersunk clearance holes through and secure L rail to capping rail using 4.2mm x 38mm screws (not supplied) **(Fig 16)**. Repeat for all balustrade spans

Installing Louvre slats

For the fixing battens, measure vertical distance "A" between 41mm flats on top and bottom rails **(Fig 17).** Cut 4 x 41mm x 41mm battens to measurement "A" and check fit by offering between L rail, positioning one up against each post. Mark front face of each batten at bottom and top **(Fig 18).**

Remove the 4 battens and place them on a flat surface so ends are aligned. Measure distance between top and bottom marks **(Fig 19).**

The raised deck system is designed to use 14 slats high. Measure height of slat and multiply by 14. Subtract this number from top and bottom batten mark measurement. Then divide remainder by 15 for the gaps **(Fig 20).**

Example

- Slat is 66mm x 14 = 924
- Measurement = 1034 (-924) = 110
- Remainder 110 ÷ 15 = 7.5mm gap

Working up from batten mark, draw a gap then a slat height then a gap etc. Repeat until 14 slats are marked on the batten faces **(Fig 20).**

Cut all slats to length by measuring distance "B" between posts on all spans **(Fig 17).** Next, fit all battens back into position between rails, drill clearance hole through front face of L rails and secure using 4.2mm x 50mm screws - not supplied (**Fig 21**). Fix each batten to side of posts at 3 points, drill clearance holes and fix using 4.2mm x 75mm screws – not supplied. To fix louvre slats, working from the bottom up, align top of slat to location marks on battens, drill csk clearance holes through slats and fix into position using 4.2mm x 50mm screws – not supplied **(Figs 22 & 23).**

All Cheshire Mouldings softwood decking products are treated for use outdoors. We recommend that a proprietary end seal is applied to all products that have been cut or drilled in order to maintain this protection.

For extra protection, you may apply a clear water repellent (please follow manufacturers instructions).

Fig.16

Fig.17

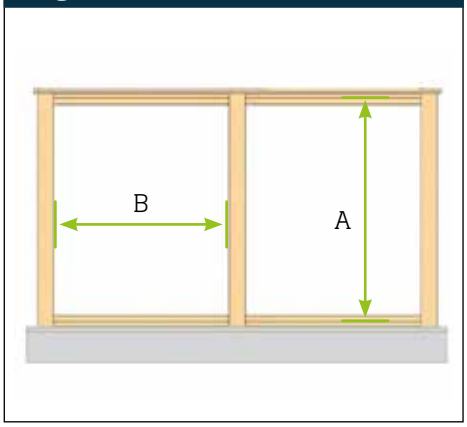

Fig.18

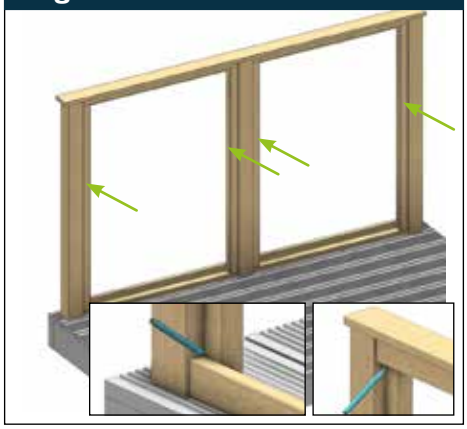

Fig.19

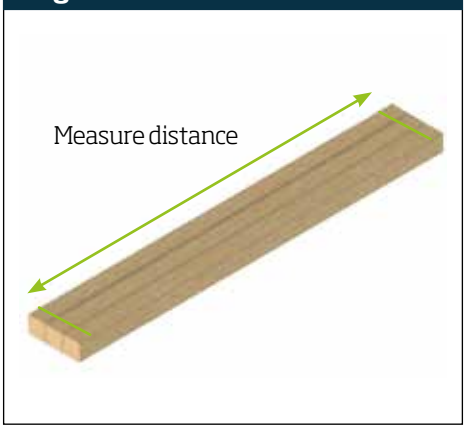

Fig.20

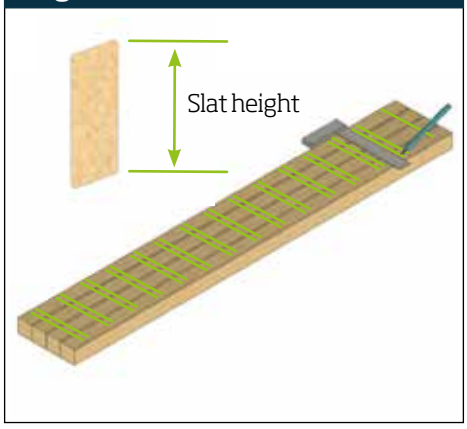

Fig.21

Fig.22

Fig.23

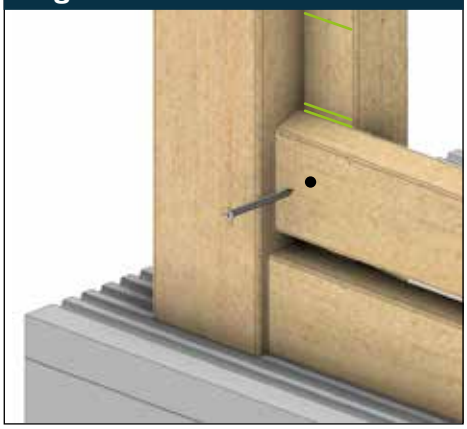

CHESHIRE mouldings

TRADE

Technical Helpline:
Freephone
0800 085 3475